Shelly MOD1U datasheet

Datasheet version v7.0

Hardware revision v1.2

Table of contents

Features 4
Module overview 5
IO layout 5
Module dimensions 6
Electrical Characteristics 7
Absolute Maximum Ratings 7
Recommended Operating Conditions 7
DC Characteristics (3.3 V, 25 °C) 8
Current Consumption Characteristics 9
Current Consumption in Active Mode 9
Wi-Fi (2.4 GHz) in Active Mode 9
Bluetooth LE in Active Mode 9
Current Consumption in Other Modes 10
Modem-sleep mode 10
Low-power modes 10
RF Characteristics 11
Wi-Fi Radio 11
Wi-Fi RF Transmitter (TX) Characteristics 12
TX Power with Spectral Mask and EVM Meeting 802.11 Standards 12
TX EVM Test 12
Wi-Fi RF Receiver (RX) Characteristics 13
RX Sensitivity 13
Maximum RX level 14
RX Adjacent channel rejection 14
Bluetooth 5 (LE) Radio 15
Bluetooth LE RF Transmitter (TX) Characteristics 15
Bluetooth LE RF Characteristics 15
Bluetooth LE - Transmitter Characteristics - 1 Mbps 15
Bluetooth LE - Transmitter Characteristics - 2 Mbps 15
Bluetooth LE - Transmitter Characteristics - 125 Kbps 16
Bluetooth LE - Transmitter Characteristics - 500 Kbps 16
Bluetooth LE RF Receiver (RX) Characteristics 17

Bluetooth LE - Receiver Characteristics - 1 Mbps 17
Bluetooth LE - Receiver Characteristics - 2 Mbps 17
Bluetooth LE - Receiver Characteristics - 125 Kbps 18
Bluetooth LE - Receiver Characteristics - 500 Kbps 19
External antenna connector dimensions 20
PCB Layout Recommendations 21
PCB Land pattern 21

List of Tables

Table 1: Absolute Maximum Ratings 7
Table 2: Recommended Operating Conditions 7
Table 3: DC Characteristics (3.3 V, 25 °C) 8
Table 4: Current Consumption for Wi-Fi (2.4 GHz) in Active Mode 9
Table 5: Current Consumption for Bluetooth LE in Active Mode 9
Table 6: Current Consumption in Modem-sleep mode 10
Table 7: Current Consumption in Low-power Modes 10
Table 8: Wi-Fi RF Characteristics 11
Table 9: TX Power with Spectral Mask and EVM Meeting 802.11 Standards 12
Table 10: TX EVM Test[1] 12
Table 11: RX Sensitivity 13
Table 12: Maximum RX level 14
Table 13: RX Adjacent Channel Rejection 14
Table 14: Bluetooth LE RF characteristics 15
Table 15: Bluetooth LE - Transmitter Characteristics - 1 Mbps 15
Table 16: Bluetooth LE - Transmitter Characteristics - 2 Mbps 16
Table 17: Bluetooth LE - Transmitter Characteristics - 125 Kbps 16
Table 18: Bluetooth LE - Transmitter Characteristics - 500 Kbps 16
Table 19: Bluetooth LE - Receiver Characteristics - 1 Mbps 17
Table 20: Bluetooth LE - Receiver Characteristics - 2 Mbps 18
Table 21: Bluetooth LE - Receiver Characteristics - 125 Kbps 18
Table 22: Bluetooth LE - Receiver Characteristics - 500 Kbps 19
Figure 1: External antenna connector dimensions. 20
Figure 2: Shelly MOD1U Recommended PCB Land Pattern 21

Features

CPU and On-Chip Memory

- ESP32-C3FH4 embedded, 32-bit RISC-V single-core processor, up to 160 MHz
- 384 KB ROM
- 400 KB SRAM (16 KB for cache)
- 8 KB SRAM in RTC
- 8 MB flash

*The flash is integrated into the chip's package. Flash supports more than **100,000 program/erase** cycles and more than **20 years** data retention time.*

Wi-Fi

- IEEE 802.11 b/g/n-compliant
- Center frequency range of operating channel: 2412 ~ 2484 MHz
- Supports 20 MHz, 40 MHz bandwidth in 2.4 GHz band
- 1T1R mode with data rate up to 150 Mbps
- Wi-Fi Multimedia (WMM)
- TX/RX A-MPDU, TX/RX A-MSDU
- Immediate Block ACK
- Fragmentation and defragmentation
- Transmit opportunity (TXOP)
- Automatic Beacon monitoring (hardware TSF)
- 4 × virtual Wi-Fi interfaces
- Simultaneous support for Infrastructure BSS in Station mode, SoftAP mode, Station + SoftAP mode, and promiscuous mode

Note that when the chip scans in Station mode, the SoftAP channel will change along with the Station channel

Bluetooth®

- Bluetooth LE: Bluetooth 5
- Speed: 125 Kbps, 500 Kbps, 1 Mbps, 2 Mbps
- Advertising extensions
- Multiple advertisement sets
- Channel selection algorithm #2
- Internal co-existence mechanism between Wi-Fi and Bluetooth to share the same antenna

Peripherals

- Up to **11 digital inputs or outputs**, usable by the firmware platform
- Support for UART communication via JS interface, more protocols will be supported in the future
- Temperature & humidity sensor support - DS18B20 & DHT22

Integrated Components on Module

- 40 MHz crystal oscillator

Antenna

- External antenna via a connector:
  - W.FL Series connector from Hirose
  - MHF III connector from I-PEX
  - AMC connector from Amphenol

Operating conditions

- Operating voltage/Power supply: 3.0 ~ 3.6 V
- Operating ambient temperature: −40 ~ 105 °C

Ambient temperature specifies the recommended temperature range of the environment immediately outside the module.

Certificates

- RoHS

Module overview

IO layout

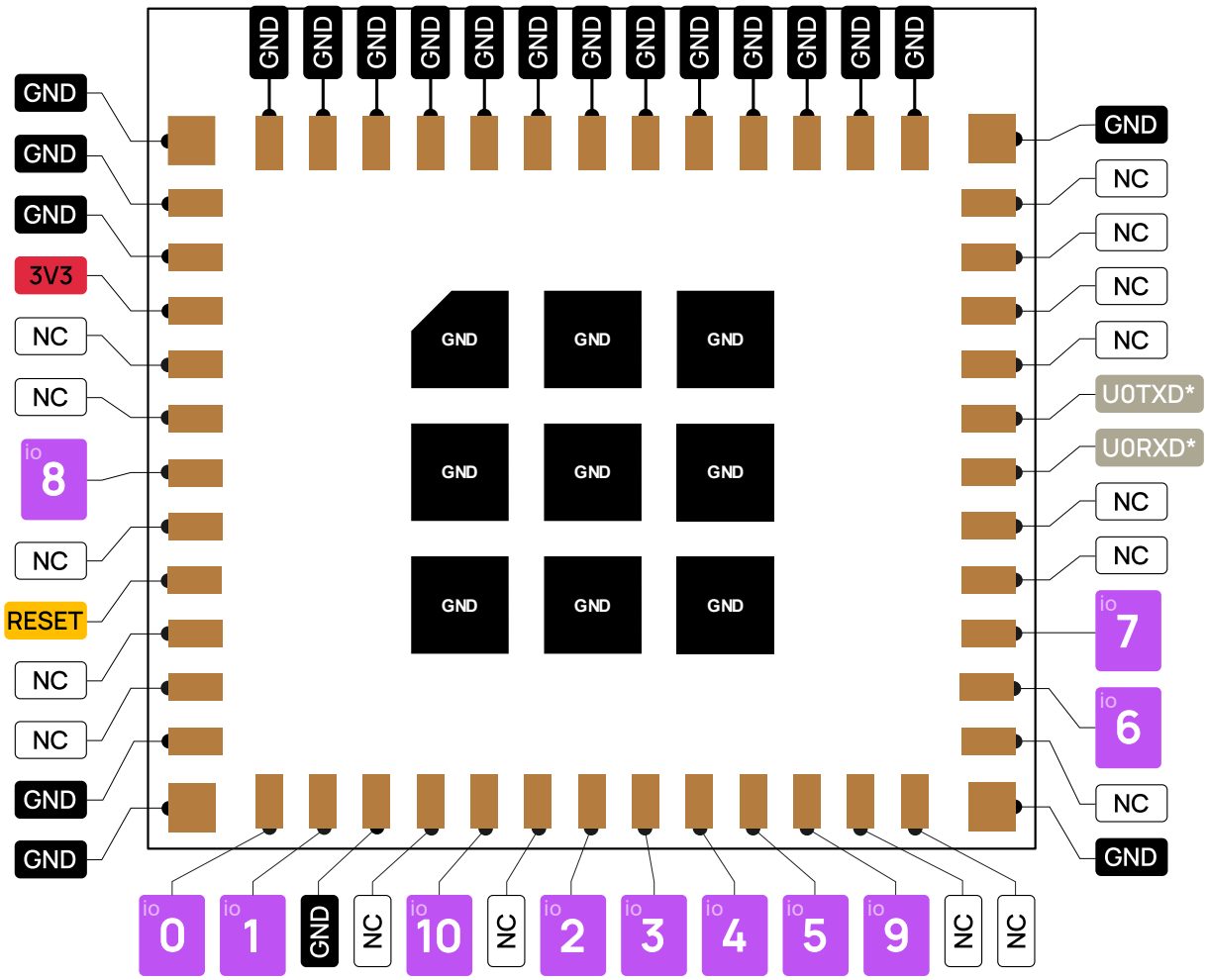

V

Special purpose IOs

The U0RXD and the U0TXD are service IOs for system diagnostics and communication, and should not be used for any other purposes.

Module dimensions

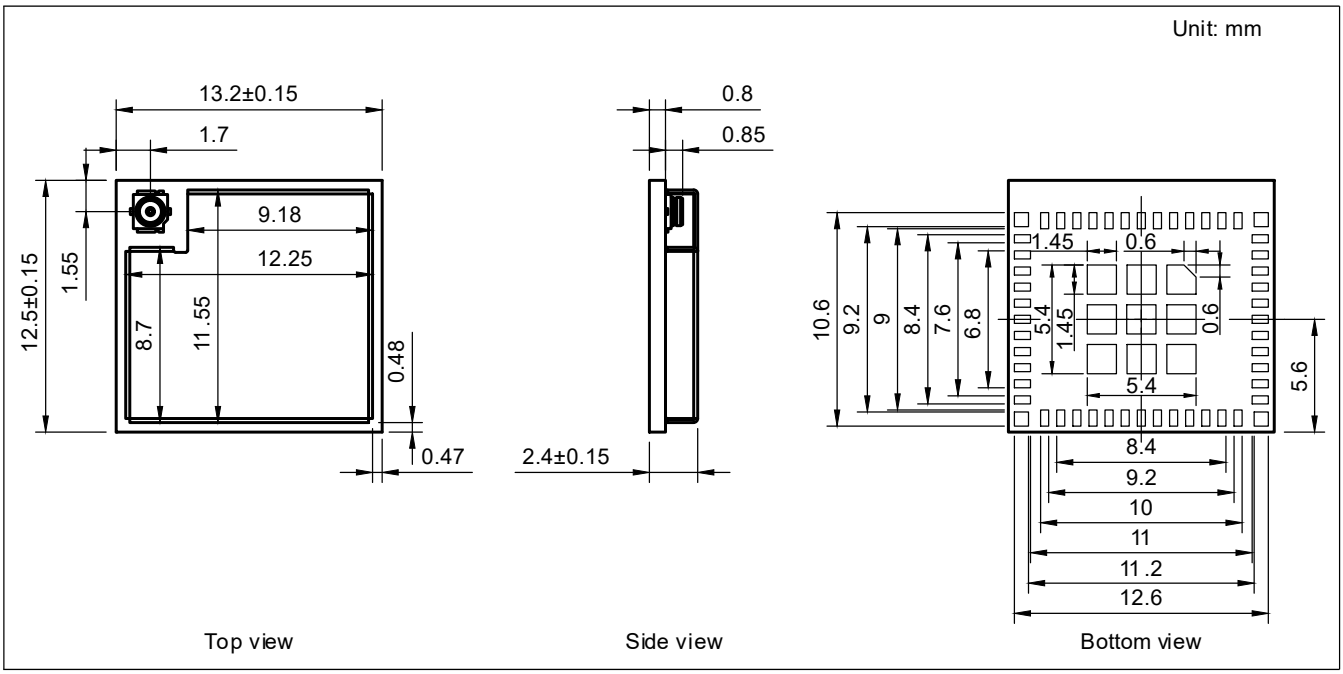

Electrical Characteristics

Absolute Maximum Ratings

Symbol	Parameter	Min	Max	Unit
VDD33	Power supply voltage	-0.3	3.6	V
T_{STORE}	Storage temperature	-40	105	°C

Table 1: Absolute Maximum Ratings

Recommended Operating Conditions

Symbol	Parameter	Min	Typ.	Max	Unit
VDD33	Power supply voltage	3.0	3.3	3.6	V
I_{VDD}	Current delivered by external power supply	0.5	—	—	A
T_A	Operating ambient temperature	-40	—	105	°C

Table 2: Recommended Operating Conditions

DC Characteristics (3.3 V, 25 °C)

Symbol	Parameter	Min	Typ.	Max	Unit
C_{IN}	Pin capacitance	—	2	—	pF
V_{IH}	High-level input voltage	0.75 × VDD[1]	—	VDD[1] + 0.3	V
V_{IL}	Low-level input voltage	−0.3	—	0.25 × VDD[1]	V
I_{IH}	High-level input current	—	—	50	nA
I_{IL}	Low-level input current	—	—	50	nA
V_{OH}[2]	High-level output voltage	0.8 × VDD[1]	—	—	V
V_{OL}[2]	Low-level output voltage	—	—	0.1 × VDD[1]	V
I_{OH}	High-level source current (VDD[1] = 3.3 V, V_{OH} >= 2.64 V, PAD_DRIVER = 3)	—	40	—	mA
I_{OL}	Low-level sink current (VDD[1] = 3.3 V, V_{OL} =0.495 V, PAD_DRIVER = 3)	—	28	—	mA
R_{PU}	Pull-up resistor	—	45	—	kΩ
R_{PD}	Pull-down resistor	—	45	—	kΩ
V_{IH_nRST}	Chip reset release voltage (CHIP_EN voltage is within the specified range)	0.75 × VDD[1]	—	VDD[1] + 0.3	V
V_{IL_nRST}	Chip reset voltage (CHIP_EN voltage is within the specified range)	−0.3	—	0.25 × VDD[1]	V

Table 3: DC Characteristics (3.3 V, 25 °C)

[1] *VDD - voltage from a power pin of a respective power domain.*

[2] *V_{OH} and V_{OL} are measured using high-impedance load.*

Current Consumption Characteristics

Current Consumption in Active Mode

The current consumption measurements are taken with a 3.3 V supply at 25 °C ambient temperature.

TX current consumption is rated at a 100% duty cycle.

RX current consumption is rated when the peripherals are disabled and the CPU idle.

Wi-Fi (2.4 GHz) in Active Mode

Work mode	Description		Peak (mA)
Active (RF working)	TX	802.11b, 1 Mbps, @20.5 dBm	350
		802.11g, 54 Mbps, @18 dBm	295
		802.11n, HT20, MCS7, @17.5 dBm	290
		802.11n, HT40, MCS7, @17 dBm	290
	RX	802.11b/g/n, HT20	82
		802.11n, HT40	84

Table 4: Current Consumption for Wi-Fi (2.4 GHz) in Active Mode

Bluetooth LE in Active Mode

Work Mode	RF Condition	Description	Peak (mA)
Active (RF working)	TX	Bluetooth LE @ 20.0 dBm	340
		Bluetooth LE @ 9.0 dBm	190
		Bluetooth LE 0 dBm	170
		Bluetooth LE @ –15.0 dBm	100
	RX	Bluetooth LE	86

Table 5: Current Consumption for Bluetooth LE in Active Mode

Current Consumption in Other Modes

Modem-sleep mode

Mode	CPU Frequency (MHz)	Description	Typ	
			All Peripherals Clocks Disabled (mA)	All Peripherals Clocks Enabled (mA)[1]
Modem-sleep[2,3]	160	CPU is idle	16	21
		CPU is running	23	28
	80	CPU is idle	13	18
		CPU is running	17	22

Table 6: Current Consumption in Modem-sleep mode

[1] *In practice, the current consumption might be different depending on which peripherals are enabled.*

[2] *In Modem-sleep mode, Wi-Fi is clock gated.*

[3] *In Modem-sleep mode, the consumption might be higher when accessing flash. For a flash rated at 80 Mbit/s, in SPI 2-line mode the consumption is 10 mA.*

Low-power modes

Mode	Description	Typ (µA)
Light-sleep	VDD_SPI and Wi-Fi are powered down, and all GPIOs are high-impedance	130
Deep-sleep	RTC timer + RTC memory	5
Power off	CHIP_EN is set to low level, the chip is powered off	1

Table 7: Current Consumption in Low-power Modes

RF Characteristics

The RF data is measured at the antenna port, where RF cable is connected, including the front-end loss. The external antennas used for the tests on the modules with external antenna connectors have an impedance of 50 Ω.

Devices should operate in the center frequency range allocated by regional regulatory authorities.

Unless otherwise stated, the RF tests are conducted with a 3.3 V (±5%) supply at 25 ^{0}C ambient temperature.

Wi-Fi Radio

Name	Description
Center frequency range of operating channel	2412 ~ 2484 MHz
Wi-Fi wireless standard	IEEE 802.11b/g/n

Table 8: Wi-Fi RF Characteristics

Wi-Fi RF Transmitter (TX) Characteristics

TX Power with Spectral Mask and EVM Meeting 802.11 Standards

Rate	Min (dBm)	Typ (dBm)	Max (dBm)
802.11b, 1 Mbps	—	20.5	—
802.11b, 11 Mbps	—	20.5	—
802.11g, 6 Mbps	—	20.0	—
802.11g, 54 Mbps	—	18.0	—
802.11n, HT20, MCS0	—	19.0	—
802.11n, HT20, MCS7	—	17.5	—
802.11n, HT40, MCS0	—	18.5	—
802.11n, HT40, MCS7	—	17.0	—

Table 9: TX Power with Spectral Mask and EVM Meeting 802.11 Standards

TX EVM Test

Rate	Min (dB)	Typ (dB)	Limit (dB)
802.11b, 1 Mbps, 20.5 dBm	—	−24.5	−10
802.11b, 11 Mbps, @20.5 dBm	—	−25.0	−10
802.11g, 6 Mbps, @20 dBm	—	−23.0	−5
802.11g, 54 Mbps, 18 dBm	—	−28.0	−25
802.11n, HT20, MCS0, @19 dBm	—	−23.5	−5
802.11n, HT20, MCS7, @17.5 dBm	—	−30.5	−27
802.11n, HT40, MCS0, 18.5 dBm	—	−26.5	−5
802.11n, HT40, MCS7, @17 dBm	—	−30.5	−27

Table 10: TX EVM Test[1]

[1] *EVM is measured at the corresponding typical TX power provided in table* ***TX Power with Spectral Mask and EVM Meeting 802.11 Standards*** *above.*

Wi-Fi RF Receiver (RX) Characteristics

For RX tests, the PER (packet error rate) limit is 8% for 802.11b, and 10% for 802.11g/n.

RX Sensitivity

Rate	Min (dBm)	Typ (dBm)	Max (dBm)
802.11b, 1 Mbps	—	−98.0	—
802.11b, 2 Mbps	—	−96.0	—
802.11b, 5.5 Mbps	—	−93.0	—
802.11b, 11 Mbps	—	−88.6	—
802.11g, 6 Mbps	—	−92.8	—
802.11g, 9 Mbps	—	−91.8	—
802.11g, 12 Mbps	—	−90.8	—
802.11g, 18 Mbps	—	−88.4	—
802.11g, 24 Mbps	—	−85.4	—
802.11g, 36 Mbps	—	−82.0	—
802.11g, 48 Mbps	—	−77.8	—
802.11g, 54 Mbps	—	−76.2	—
802.11n, HT20, MCS0	—	−92.6	—
802.11n, HT20, MCS1	—	−90.6	—
802.11n, HT20, MCS2	—	−88.0	—
802.11n, HT20, MCS3	—	−84.8	—
802.11n, HT20, MCS4	—	−81.6	—
802.11n, HT20, MCS5	—	−77.4	—
802.11n, HT20, MCS6	—	−75.6	—
802.11n, HT20, MCS7	—	−74.4	—
802.11n, HT40, MCS0	—	−90.0	—
802.11n, HT40, MCS1	—	−87.6	—
802.11n, HT40, MCS2	—	−84.8	—
802.11n, HT40, MCS3	—	−81.8	—
802.11n, HT40, MCS4	—	−78.4	—
802.11n, HT40, MCS5	—	−74.2	—
802.11n, HT40, MCS6	—	−72.6	—
802.11n, HT40, MCS7	—	−71.2	—

Table 11: RX Sensitivity

Maximum RX level

Rate	Min (dBm)	Typ (dBm)	Max (dBm)
802.11b, 1 Mbps	—	5	—
802.11b, 11 Mbps	—	5	—
802.11g, 6 Mbps	—	5	—
802.11g, 54 Mbps	—	0	—
802.11n, HT20, MCS0	—	5	—
802.11n, HT20, MCS7	—	0	—
802.11n, HT40, MCS0	—	5	—
802.11n, HT40, MCS7	—	0	—

Table 12: Maximum RX level

RX Adjacent channel rejection

Rate	Min (dB)	Typ (dB)	Max (dB)
802.11b, 1 Mbps	—	35	—
802.11b, 11 Mbps	—	35	—
802.11g, 6 Mbps	—	31	—
802.11g, 54 Mbps	—	14	—
802.11n, HT20, MCS0	—	31	—
802.11n, HT20, MCS7	—	13	—
802.11n, HT40, MCS0	—	19	—
802.11n, HT40, MCS7	—	8	—

Table 13: RX Adjacent Channel Rejection

Bluetooth 5 (LE) Radio

Bluetooth LE RF Transmitter (TX) Characteristics

Bluetooth LE RF Characteristics

Name	Description
Center frequency range of operating channel	2402 ~ 2480 MHz
RF transmit power range	−24.0 ~ 20.0 dBm

Table 14: Bluetooth LE RF characteristics

Bluetooth LE - Transmitter Characteristics - 1 Mbps

Parameter	Description	Min	Typ	Max	Unit
In-band emissions	F = F0 ± 2 MHz	—	−37.62	—	dBm
	F = F0 ± 3 MHz	—	−41.95	—	dBm
	F = F0 ± > 3 MHz	—	−44.48	—	dBm
Modulation characteristics	$\Delta f1_{avg}$	—	245.00	—	kHz
	$\Delta f2_{max}$	—	208.00	—	kHz
	$\Delta f2_{avg}/\Delta f1_{avg}$	—	0.93	—	—
Carrier frequency offset	—	—	−9.00	—	kHz
Carrier frequency drift	$\lvert f_0 - f_n \rvert_{n=2,3,4,...k}$	—	1.17	—	kHz
	$\lvert f_1 - f_0 \rvert$	—	0.30	—	kHz
	$\lvert f_n - f_{n-5} \rvert_{n=6,7,8,...k}$	—	4.90	—	kHz

Table 15: Bluetooth LE - Transmitter Characteristics - 1 Mbps

Bluetooth LE - Transmitter Characteristics - 2 Mbps

Parameter	Description	Min	Typ	Max	Unit
In-band emissions	F = F0 ± 4 MHz	—	−43.55	—	dBm
	F = F0 ± 5 MHz	—	−45.26	—	dBm
	F = F0 ± > 5 MHz	—	−47.00	—	dBm
Modulation characteristics	$\Delta f1_{avg}$	—	497.00	—	kHz
	$\Delta f2_{max}$	—	398.00	—	kHz
	$\Delta f2_{avg}/\Delta f1_{avg}$	—	0.95	—	—
Carrier frequency offset	—	—	-9.00	—	kHz

Carrier frequency drift	$\lvert f_0 - f_n \rvert_{n=2,3,4,\ldots k}$	—	0.46	—	kHz
	$\lvert f_1 - f_0 \rvert$	—	0.70	—	kHz
	$\lvert f_n - f_{n-5} \rvert_{n=6,7,8,\ldots k}$	—	6.80	—	kHz

Table 16: Bluetooth LE - Transmitter Characteristics - 2 Mbps

Bluetooth LE - Transmitter Characteristics - 125 Kbps

Parameter	Description	Min	Typ	Max	Unit
In-band emissions	F = F0 ± 2 MHz	—	−37.90	—	dBm
	F = F0 ± 3 MHz	—	−41.00	—	dBm
	F = F0 ± > 3 MHz	—	−42.50	—	dBm
Modulation characteristics	$\Delta f1_{avg}$	—	252.00	—	kHz
	$\Delta f1_{max}$	—	200.00	—	kHz
Carrier frequency offset	—	—	−13.70	—	kHz
Carrier frequency drift	$\lvert f_0 - f_n \rvert_{n=1,2,3,\ldots k}$	—	1.52	—	kHz
	$\lvert f_0 - f_3 \rvert$	—	0.65	—	kHz
	$\lvert f_n - f_{n-3} \rvert_{n=7,8,9,\ldots k}$	—	0.70	—	kHz

Table 17: Bluetooth LE - Transmitter Characteristics - 125 Kbps

Bluetooth LE - Transmitter Characteristics - 500 Kbps

Parameter	Description	Min	Typ	Max	Unit
In-band emissions	F = F0 ± 2 MHz	—	−37.90	—	dBm
	F = F0 ± 3 MHz	—	−41.30	—	dBm
	F = F0 ± > 3 MHz	—	−42.80	—	dBm
Modulation characteristics	$\Delta f2_{avg}$	—	220.00	—	kHz
	$\Delta f2_{max}$	—	205.00	—	kHz
Carrier frequency offset	—	—	−11.90	—	kHz
Carrier frequency drift	$\lvert f_0 - f_n \rvert_{n=1,2,3,\ldots k}$	—	1.37	—	kHz
	$\lvert f_0 - f_3 \rvert$	—	1.09	—	kHz
	$\lvert f_n - f_{n-3} \rvert_{n=7,8,9,\ldots k}$	—	0.51	—	kHz

Table 18: Bluetooth LE - Transmitter Characteristics - 500 Kbps

Bluetooth LE RF Receiver (RX) Characteristics

Bluetooth LE - Receiver Characteristics - 1 Mbps

Parameter	Description	Min	Typ	Max	Unit
Sensitivity @30.8% PER	—	—	−96	—	dBm
Maximum received signal @30.8% PER	—	—	10	—	dBm
Co-channel C/I	—	—	8	—	dB
Adjacent channel selectivity C/I	F = F0 + 1 MHz	—	−4	—	dB
	F = F0 − 1 MHz	—	−3	—	dB
	F = F0 + 2 MHz	—	−32	—	dB
	F = F0 − 2 MHz	—	−36	—	dB
	F ≥F0 + 3 MHz[1]	—	—	—	dB
	F ≤F0 − 3 MHz	—	−39	—	dB
Image frequency	—	—	−29	—	dB
Adjacent channel to image frequency	F = F_{image} + 1 MHz	—	−38	—	dB
	F = F_{image} − 1 MHz	—	−34	—	dB
Out-of-band blocking performance	30 MHz ~ 2000 MHz	—	−9	—	dBm
	2003 MHz ~ 2399 MHz	—	−18	—	dBm
	2484 MHz ~ 2997 MHz	—	−16	—	dBm
	3000 MHz ~ 12.75 GHz	—	−6	—	dBm
Intermodulation	—	—	−44	—	dBm

Table 19: Bluetooth LE - Receiver Characteristics - 1 Mbps

[1] Refer to the value of Adjacent channel to image frequency when F = F_{image} − 1 MHz

Bluetooth LE - Receiver Characteristics - 2 Mbps

Parameter	Description	Min	Typ	Max	Unit
Sensitivity @30.8% PER	—	—	−93	—	dBm
Maximum received signal @30.8% PER	—	—	0	—	dBm
Co-channel C/I	—	—	10	—	dB
Adjacent channel selectivity C/I	F = F0 + 2 MHz	—	−7	—	dB
	F = F0 − 2 MHz	—	−7	—	dB
	F = F0 + 4 MHz[1]	—	—	—	dB
	F = F0 − 4 MHz	—	−34	—	dB
	F ≥F0 + 6 MHz	—	−39	—	dB

	F ≤F0 – 6 MHz	—	–39	—	dB
Image frequency	—	—	–27	—	dB
Adjacent channel to image frequency	F = F_{image} + 2 MHz	—	–39	—	dB
	F = F_{image} – 2 MHz[2]	—	—	—	dB
Out-of-band blocking performance	30 MHz ~ 2000 MHz	—	–17	—	dBm
	2003 MHz ~ 2399 MHz	—	–19	—	dBm
	2484 MHz ~ 2997 MHz	—	–16	—	dBm
	3000 MHz ~ 12.75 GHz	—	–22	—	dBm
Intermodulation	—	—	–40	—	dBm

Table 20: Bluetooth LE - Receiver Characteristics - 2 Mbps

[1] *Refer to the value of Image frequency.*

[2] *Refer to the value of Adjacent channel selectivity C/I when F = F0 + 2 MHz*

Bluetooth LE - Receiver Characteristics - 125 Kbps

Parameter	Description	Min	Typ	Max	Unit
Sensitivity @30.8% PER	—	—	–104	—	dBm
Maximum received signal @30.8% PER	—	—	10	—	dBm
Co-channel C/I	—	—	2	—	dB
Adjacent channel selectivity C/I	F = F0 + 1 MHz	—	–6	—	dB
	F = F0 – 1 MHz	—	–5	—	dB
	F = F0 + 2 MHz	—	–40	—	dB
	F = F0 – 2 MHz	—	–42	—	dB
	F ≥F0 + 3 MHz[1]	—	—	—	dB
	F ≤F0 – 3 MHz	—	–46	—	dB
Image frequency	—	—	–34	—	dB
Adjacent channel to image frequency	F = F_{image} + 1 MHz	—	–44	—	dB
	F = F_{image} – 1 MHz	—	–37	—	dB

Table 21: Bluetooth LE - Receiver Characteristics - 125 Kbps

[1] *Refer to the value of Adjacent channel to image frequency when F = F_{image} – 1 MHz*

Bluetooth LE - Receiver Characteristics - 500 Kbps

Parameter	Description	Min	Typ	Max	Unit
Sensitivity @30.8% PER	—	—	−99	—	dBm
Maximum received signal @30.8% PER	—	—	10	—	dBm
Co-channel C/I	—	—	3	—	dB
Adjacent channel selectivity C/I	F = F0 + 1 MHz	—	−5	—	dB
	F = F0 − 1 MHz	—	−7	—	dB
	F = F0 + 2 MHz	—	−39	—	dB
	F = F0 − 2 MHz	—	−40	—	dB
	F ≥ F0 + 3 MHz[1]	—	—	—	dB
	F ≤ F0 − 3 MHz	—	−40	—	dB
Image frequency	—	—	−34	—	dB
Adjacent channel to image frequency	F = F_{image} + 1 MHz	—	−43	—	dB
	F = F_{image} − 1 MHz	—	−38	—	dB

Table 22: Bluetooth LE - Receiver Characteristics - 500 Kbps

[1] *Refer to the value of Adjacent channel to image frequency when F = F_{image} − 1 MHz*

External antenna connector dimensions

Shelly MOD1Uuses the third-generation external antenna connector as shown in Dimensions of External Antenna Connector. This connector is compatible with the following connectors:

- W.FL Series connector from Hirose
- MHF III connector from I-PEX
- AMC connector from Amphenol

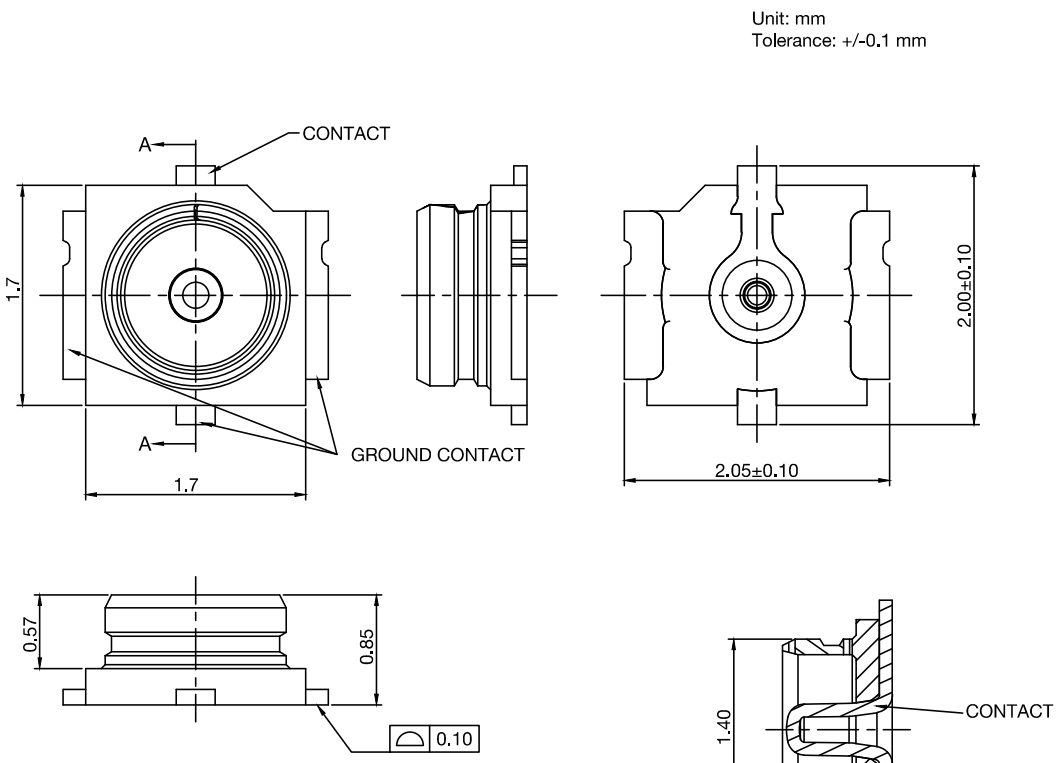

HOUSING MATERIAL: THERMOPLASTIC, WHITE, UL 94V-0;

CONTACT MATERIAL: COPPER ALLOY, GOLD PLATED ALL OVER;

SHELL MATERIAL: COPPER ALLOY, GOLD PLATED ALL OVER;

PERFORMANCE:

CONTACT RESISTANCE: 20mOHM Max.

DIELECTRIC WITHSTANDING VOLTAGE: 200V AC FOR 1MINUTE;

INSULATION RESISTANCE: 500MOHM Min.

Figure 1: External antenna connector dimensions.

PCB Layout Recommendations

PCB Land pattern

This section provides the following resources for your reference:

- Figures for recommended PCB land patterns with all the dimensions needed for PCB design.

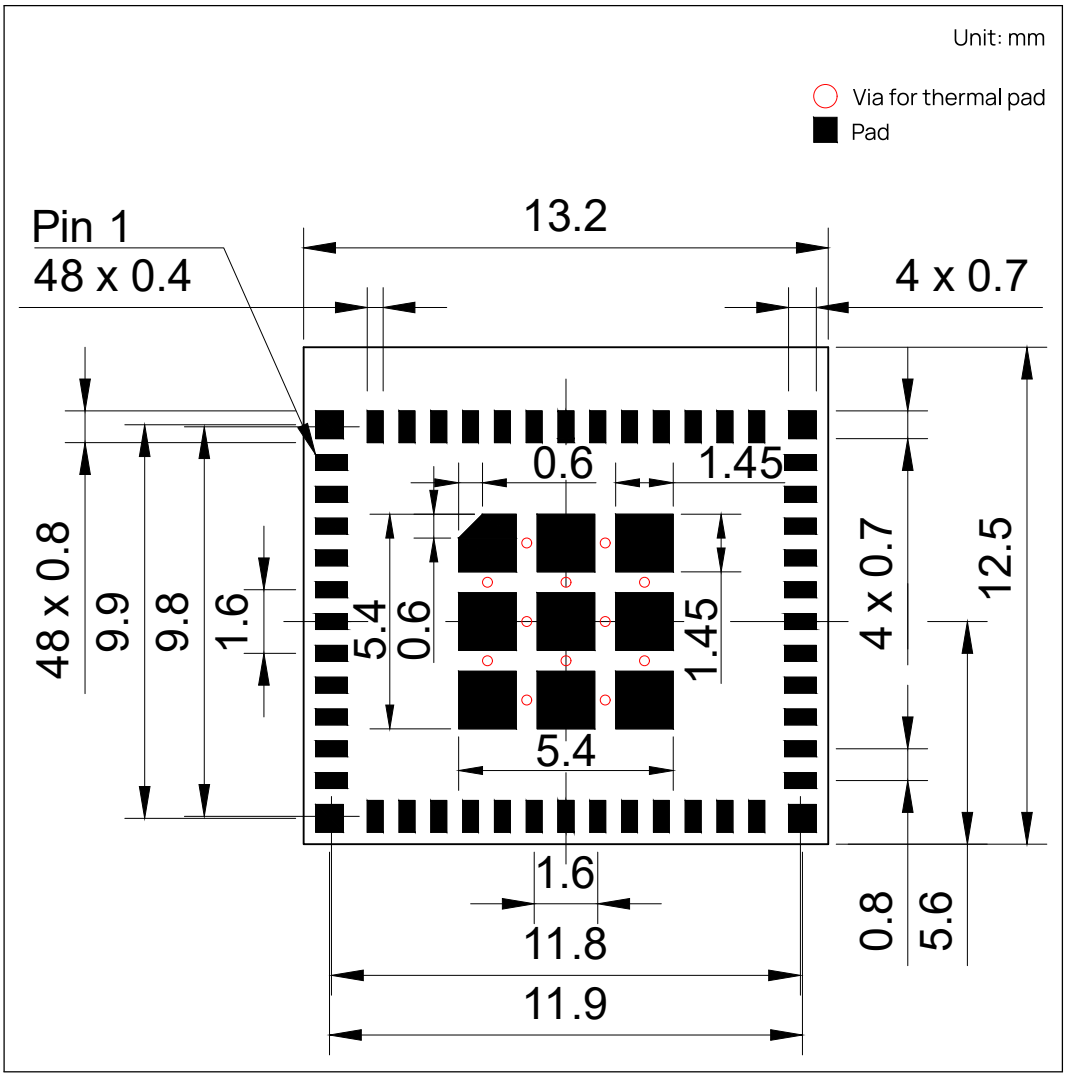

Figure 2: Shelly MOD1U Recommended PCB Land Pattern

Revision history

Date	Version	Release notes
2026-02-03	v5.0	1. Added Revision history table. 2. IOs layout updated to include NTC, and System button.
2026-06-19	v6.0	1. Flash size updated.
2026-09-18	v7.0	1. The total supported IO has increased from 8 to 11 following a firmware update. The IOs layout has been revised accordingly.